TN 295
.U4

No. 8992

THE LIBRARY OF CONGRESS

IC 8992

Bureau of Mines Information Circular/1984

Use of Steel Sets in Underground Coal

By J. H. Stears, M. O. Serbousek, and K. E. Hay

UNITED STATES DEPARTMENT OF THE INTERIOR

Information Circular 8992

Use of Steel Sets in Underground Coal

By J. H. Stears, M. O. Serbousek, and K. E. Hay

UNITED STATES DEPARTMENT OF THE INTERIOR
William P. Clark, Secretary

BUREAU OF MINES
Robert C. Horton, Director

LIBRARY OF CONGRESS
5
DEC 2 1 1984

TN295
.U4
no.8992

Library of Congress Cataloging in Publication Data:

Stears, J. H. (Juel H.)

Use of steel sets in underground coal.

(Information circular / United States Department of the Interior, Bureau of Mines ; 8992)

Bibliography: p. 15.

Supt. of Docs. no.: I 28.27:8992.

1. Mine timbering. 2. Ground control (Mining). I. Serbousek, M. O. (Maynard O.). II. Hay, K. E. (Kenneth E.). III. Series: Information circular (United States. Bureau of Mines) ; 8992.

~~TN295.U4~~ [TN289] 622s [622'.334] 84-600202

CONTENTS

	Page
Abstract	1
Introduction	1
Steel support accidents	2
Survey of current practices	2
Steel support systems	3
Steel crossbars	3
Rigid steel arches	3
Yielding steel arches	5
Background information for design of steel supports	6
Types of roof strata	7
Overburden pressure	8
Seam thickness	8
Immediate roof type	8
Floor type	8
Entry width	8
Entry shape	8
Rock properties	8
Rock mechanics data	8
Steel type	9
Backpacking	9
Expeditious support installation	9
Example of steel support selection for U.S. mines	10
Load determination	10
Support selection	11
Checks for support adequacy	12
Shear capacity	12
Lateral stability	13
Deflection	13
Localized flange or web buckling	13
Support length (web crippling)	14
Summary	14
References	15
Appendix.--Explanation of symbols	16

ILLUSTRATIONS

1.	Steel arch configurations	3
2.	Arch-member cross sections	4
3.	Types of bolted joints	4
4.	Butt plate joint	4
5.	Typical yielding arch shapes	6
6.	Yield box construction	7
7.	Typical arch with U-shaped cross section	7
8.	Examples of poor and good backpacking practices	9
9.	Possible roof support envelopes for entry width	10
10.	Nomogram for determining support loads	11
11.	Types of beam loading conditions	12
12.	Pertinent properties for selected beam	13

TABLE

1.	Summary of accidents involving steel support members	2

UNIT OF MEASURE ABBREVIATIONS USED IN THIS REPORT

ft	foot	lb	pound
ft-lb	foot pound	lb/ft	pound per foot
h	hour	lb/ft^3	pound per cubic foot
in	inch	pct	percent
in^3	cubic inch	psi	pound per square inch
kips	thousand pound	yr	year

USE OF STEEL SETS IN UNDERGROUND COAL

By J. H. Stears,[1] M. O. Serbousek,[2] and K. E. Hay[3]

ABSTRACT

This Bureau of Mines report presents information on the use of steel supports in U.S. coal mines, including accident statistics for a 3-yr period and a survey of present applications and problems. It also contains a summary of available steel arch configurations and a description of steel support design criteria for ground control applications.

INTRODUCTION

A primary goal of Bureau of Mines research is to provide better roof control and thus reduce the exposure of miners to falls of roof rock. Much of the coal lying under easily supported roof has already been mined. As mining progresses into deeper coal seams and poorer roof areas, ground control will become more difficult, and accidents resulting from roof falls can be expected to increase. Steel beams and rails are widely used in the mining industry to support difficult ground. Steel arches, which are slowly gaining acceptance in U.S. mines, are the most successful devices for ground control in poor conditions.

Numerous accidents occur while handling and installing steel supports. It is likely that accidents will increase with expected increased use of steel for support. Some of the safety problems appear to involve failure to use adequate design criteria already available.

This report presents information on the use and application of steel supports in U.S. coal mines. It includes accident statistics associated with the use of steel supports for a 3-yr period, a survey of coal mining companies for applications and problems associated with the use of steel supports, a description of the various arch configurations available, and a presentation of steel support design criteria.

[1]Mining engineer.
[2]Structural engineer.
[3]Supervisory civil engineer.
Spokane Research Center, Bureau of Mines, Spokane, WA.

STEEL SUPPORT ACCIDENTS

Steel support accidents are summarized in table 1 for 1978-80. These data were obtained by searching through the accident files for the period covered; some accidents may have been missed owing to classification and filing procedures.

TABLE 1. - Summary of accidents involving steel support members

Category	1978	1979	1980	Total
Transportation..	28	34	17	79
Installing:				
Handling.....	7	18	8	33
Beam slipped and fell.....	1	2	2	5
Recovering.....	0	1	1	2
Total.....	36	55	28	119

The first category listed is the transporting of steel members. This includes loading, unloading, moving, lifting, or carrying supports. The injuries include such items as mashed and cut fingers and toes, mashed hands, bruises to various parts of the body, and sprained muscles in the neck, shoulder, back, abdomen, and legs. Generally, the weight and awkwardness of the beams create difficulties in handling in tight quarters.

The second category is installing supports. Most of the accidents occurred while handling the beams during installation. They include mashed, cut, bruised, or sprained muscles that occurred while moving the beams into position. Some of the beams were being manually lifted into position against the roof, while others were being placed on machine booms for subsequent lifting into position. A few accidents occurred when beams slipped and fell off the jacks or machine booms while being lifted into position.

In the third category of recovering members, only one accident occurred in 1979 and one in 1980. They involved a sprained shoulder muscle and a mashed hand.

SURVEY OF CURRENT PRACTICES

A limited survey of selected coal mining companies using steel supports was made to obtain information on pertinent practices and problems. Five companies operating 17 mines were contacted. The companies were located in central and southeastern Pennsylvania, northern West Virginia, and western Virginia.

Steel supports were used in supporting haulageways, ventilation overcasts, and roof-fall areas. They were also used in longwall entries and faces and as airway supports. Steel beams ranging in size from 4 to 8 in and steel rails ranging in size from 60 to 120 lb were employed. Both yielding and rigid arches were used, with 4 in being the predominant size. One company covered its 4-in arches with corrugated steel tunnel liner.

Steel supports were installed both manually and with equipment. Manual installation involves jacking the supports against the roof with a beam jack. Roof-bolting machines equipped with timber booms were used to lift the supports against the roof. Equipment for holding the supports in position until legs are installed include beam jacks, hydraulic jacks, and roof-bolted saddles. None of the companies presently recover any steel supports. Care is taken to install the horizontal beams level and the support posts plumb. The support posts were firmly wedged under the beams, and any voids above the beam were blocked to provide support against the roof.

Handling of steel supports was a major problem. This operation is difficult and hazardous due to the size, weight, and bulkiness of the supports. All companies indicated that most of their injuries occurred while handling supports. Strains to various muscles occurred when lifting and moving the heavy beams and rails. Mashed fingers and hands that

were caught between the support being handled and another object were especially prevalent. Foot injuries from falling supports were also quite common. Another major problem was the excessive time required for the installation of steel supports.

Various modes of support failure were reported. These include bending failure of beams, shearing and twisting failure of steel rails, and compression failure of the supporting legs. Footing failures in fire clay bottom were also reported.

Two companies commented on possible research needs. One company mentioned that safe and timely installation of the heavy steel supports in the confining mine environment remains the greatest obstacle. Another company suggested further investigation of resupporting roof-fall cavities with arch supports and corrugated steel tunnel liner.

STEEL SUPPORT SYSTEMS

Much of the following information on steel support systems is based on literature from Bethlehem Steel,[4] Commercial Shearing, Inc., and the Dosco Corp.

STEEL CROSSBARS

Steel crossbars are the most common steel support. They are usually adequate for fairly heavy loads. However, they are inadequate in extreme situations such as massive fall areas or excessively squeezing ground conditions. Heavy loads will create excessive bending and eventual failure of the beams. Wide-flange or H-sections are preferred because of their greater resistance to bending. Steel rails are also used as crossbars. However, old rails may have lost ductility and, consequently, may be susceptible to catastrophic failure.

RIGID STEEL ARCHES

Rigid arches are designed to support without yielding. The arch is more efficient than the flat crossbar. Depending on the shape and loading conditions of the arch, the imposed load in the arch is transmitted as compression rather than bending forces.

A variety of configurations can be supplied by the different companies. Some of the standard ones are shown in figure 1. These include the two- and three-piece continuous arch and the two-piece rib-and-post. Flat-top arches with either straight or curved sides are also available. In mines with a swelling bottom, invert-strut arches are recommended. Almost any desired configuration for differing ground conditions can be supplied on special order.

Arch members with wide-flange beam cross sections are available, as shown in figure 2*A*. However, this cross section

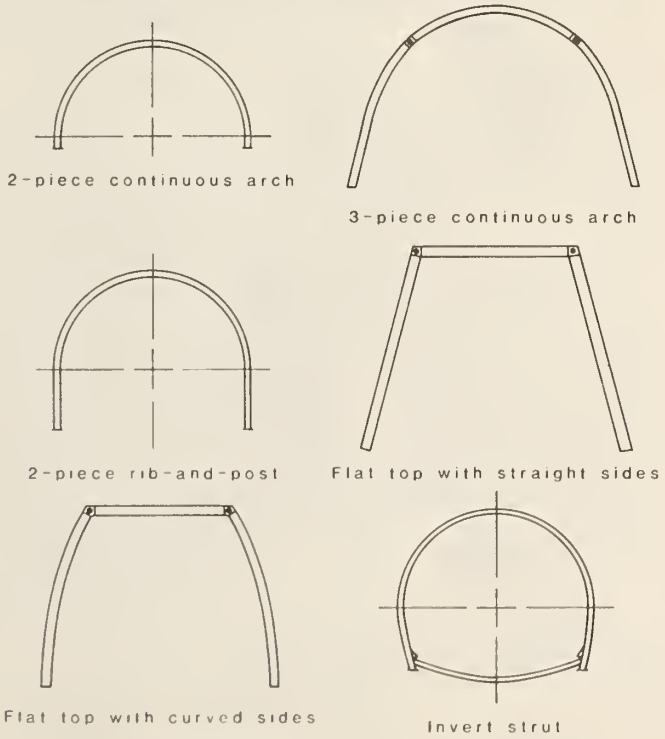

FIGURE 1. - Steel arch configurations.

[4]Reference to specific products or manufacturers does not imply endorsement by the Bureau of Mines.

is relatively weak in resisting oblique forces and is susceptible to being twisted out of shape by them. Rolled steel joist (American standard beam or S section) cross sections are also available (fig. 2*B*). These offer properties similar to those of the wide-flange beams and, in addition, are two to three times stronger under oblique loadings. Box-section beams (fig. 2*C*) are two shapes continually seam-welded. They give better all-round performance under heavy loading than the rolled-joist sections.

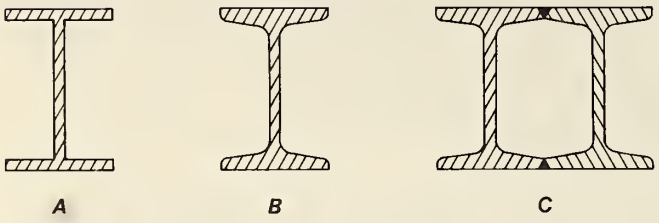

FIGURE 2. - Arch-member cross sections. *A*, Wide-flange beam; *B*, rolled steel joist; *C*, box sections.

Connectors are necessary in most arches since effective one-piece units cannot be transported underground. Joining of the arch sections is done in a variety of ways. One type of joint is shown in figure 3*A*. A single bolt holds the two forged lugs tightly together to form a rigid joint and transmit shear forces and bending moment from one member to the other.

A flexible joint is shown in figure 3*B*. A single bolt holds two rounded forged lugs together which roll on themselves under weight, thus enabling the joint to rotate under load without fracturing.

Another vender uses butt plates welded to the beam ends (fig. 4). The beam ends are butted together and connected with bolts through holes provided in the plates.

Arches are usually installed on 3- to 6-ft centers, and they are connected together with tie rods for lateral stability. Normally, the periphery of the arches is lagged with 2- to 3-in treated wooden boards.

For maximum efficiency, the void space between the outside of the arches and the strata must be backfilled or solidly blocked. This provides uniform loading of the arch structure and avoids point loading that would locally overstress the arches and destroy the overall support capacity of the total arch. Rigid arches

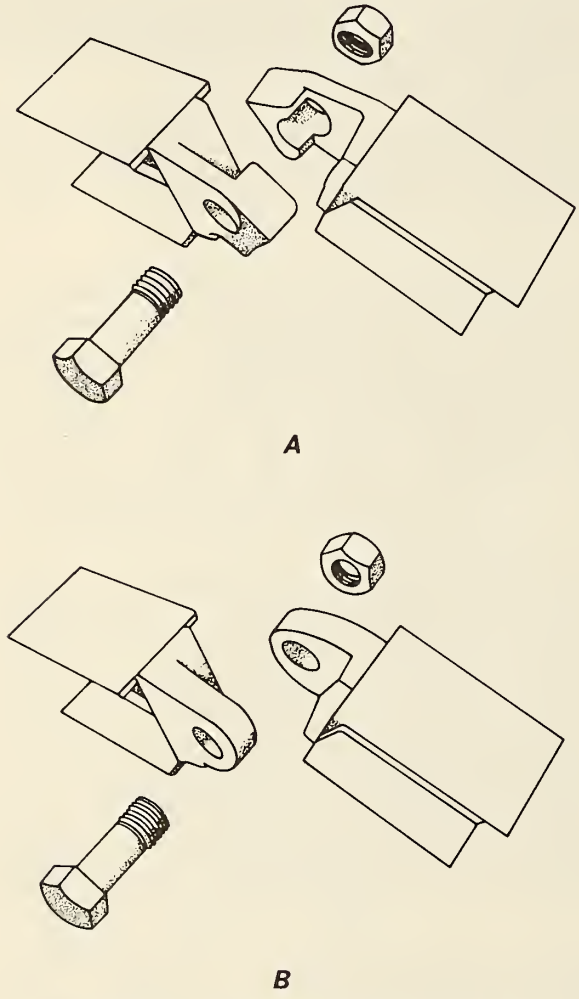

FIGURE 3. - Types of bolted joints. *A*, Rigid joint; *B*, flexible joint.

FIGURE 4. - Butt plate joint.

are usually installed on main haulageways, slopes, and shaft stations that require permanent support where large ground movements are not expected.

YIELDING STEEL ARCHES

Yielding mine arches consist of arch or ring sets that incorporate a sliding friction assembly to accommodate heavy ground pressure and thus prevent distortion of the support.

The yielding arch is designed to relax before it becomes excessively bent or distorted. The joint acts as a safety valve to keep the steel set from being destroyed; it is designed to yield at a load below the yield point of the steel.

Yielding arches serve the same function as rigid arches but are much more effective in areas of severe pressures or squeezing ground conditions, which produce large deformation that would destroy a rigid arch. They are an economical support method under severe conditions where extensive movements occur because of faulted ground, overstressed strata, longwall operations, or strata with variable properties.

Yielding arches are fabricated in various shapes such as circular and horseshoe and consist of three or more segments of high-strength steel with a yield point above 50,000 psi. Three typical arch shapes are shown in figure 5. The three-segment symmetrical arch with leg segments toed in (fig. 5*A*) is used where the ground pressure is predominantly vertical, the three-segment symmetrical arch with leg segments toed out (fig. 5*B*) resists lateral as well as vertical ground pressures, and the symmetrical ring (fig. 5*C*) resists ground pressures from all directions.

The two most common yielding mechanisms are the yield box and the overlap joint. The yield box was developed for use with standard-type beam sections such as the wide-flange, joist, and box-section beams. The yield box is placed on the floor, and the lower end of the arch leg is inserted into its top. Construction of a yield box is shown in figure 6. When the support is set, frictional resistance is established between the arch leg, the wooden wedge, the brake shoe, and the rear side of the box.

Several companies furnish arches made of U-shaped cross sections that nest together at the ends to form an overlapping joint. Heavy U-bolt clamps are installed over the joints to provide the yielding feature. The joints are tightened enough to hold under normal loads, but when excessive pressures develop, they permit the nested segments to slide or yield before the yield strength of the steel is reached. This relieves the load and maintains the structural integrity of the arch while the ground is permitted to relax gradually until equilibrium is reached. As the successful functioning of a yielding set depends on its ability to yield when required, it is critical that the U-bolts at the joints be properly tightened. The U-bolt nuts are usually torqued to between 150 and 180 ft-lb (1, p. 406).[5]

Views of a typical arch and the U-shaped cross section are shown in figure 7. The most commonly used sections weigh from 10 to 25 lb/ft and have outside dimensions of 3 to 7 in. Moduli of sections on "XX" and "YY" axes are practically equal, thereby offering uniform resistance to eccentric loading. Ordinary H-beams give poor support when loads are applied at an angle to the major axis of inertia, causing torsional moment on the section. The high torsional resistance of the U-shaped sections allows them to be twisted out of the vertical plane and still provide adequate strength.

[5]Underlined numbers in parentheses refer to items in the list of references preceding the appendix.

Arches are spaced at 2- to 5-ft intervals, depending on expected ground pressure. Adjoining sets are connected with horizontal struts made of steel channels, pipes, or rods to maintain spacing and provide lateral stability. Treated timber lagging is installed around the outside of the arches, and blocking or backfilling is used to provide uniform loading. Footers of steel plate, channel steel, or wood blocks are placed between the bottom of the legs and the floor to reduce penetration if the floor is soft.

BACKGROUND INFORMATION FOR DESIGN OF STEEL SUPPORTS

This section was extracted from "Steel Supports Design Criteria: A Summary of European Data" (2). This Bureau contract report presents information pertaining to the relationship between steel support selection and the physical and geological parameters that make up the support environment. The following parameters were examined to determine their contribution to support design.

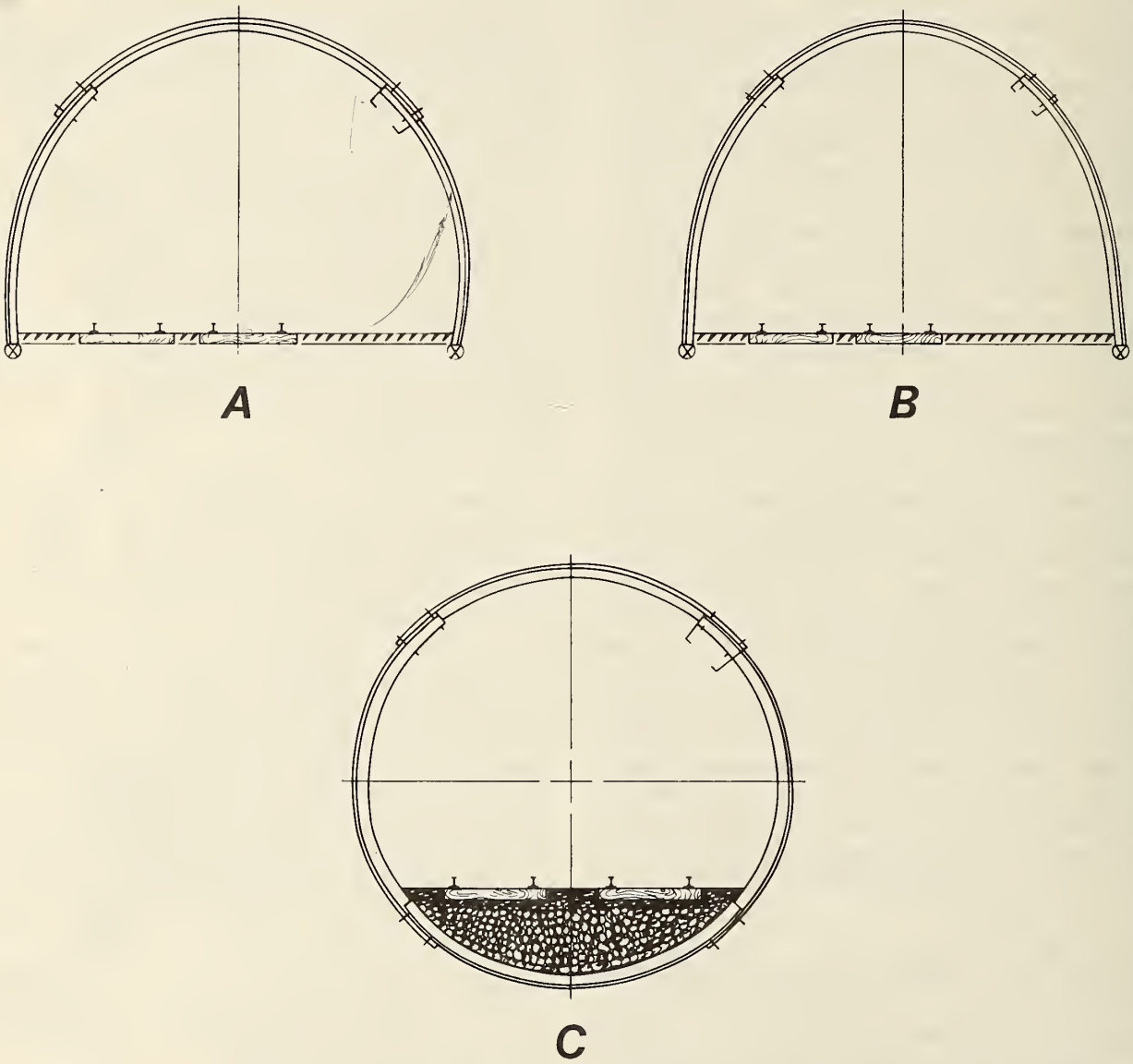

FIGURE 5. - Typical yielding arch shapes. *A*, Three-segment symmetrical with legs toed in; *B*, three-segment symmetrical with legs toed out; *C*, symmetrical ring.

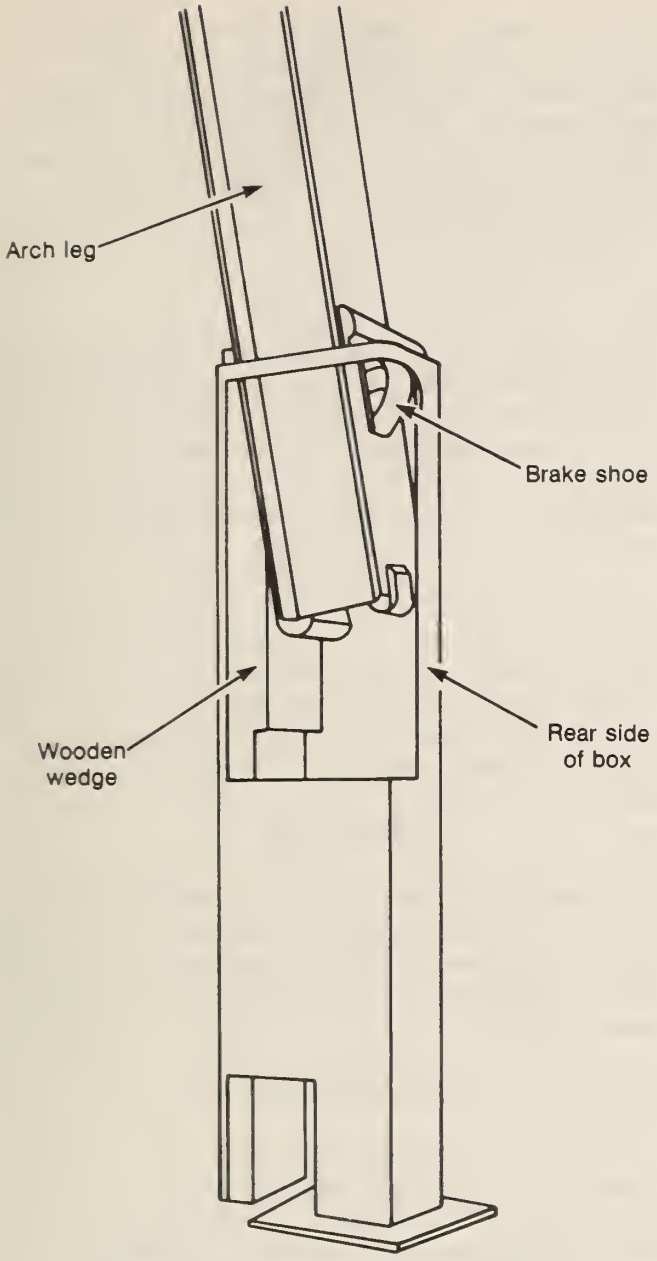

FIGURE 6. - Yield box construction.

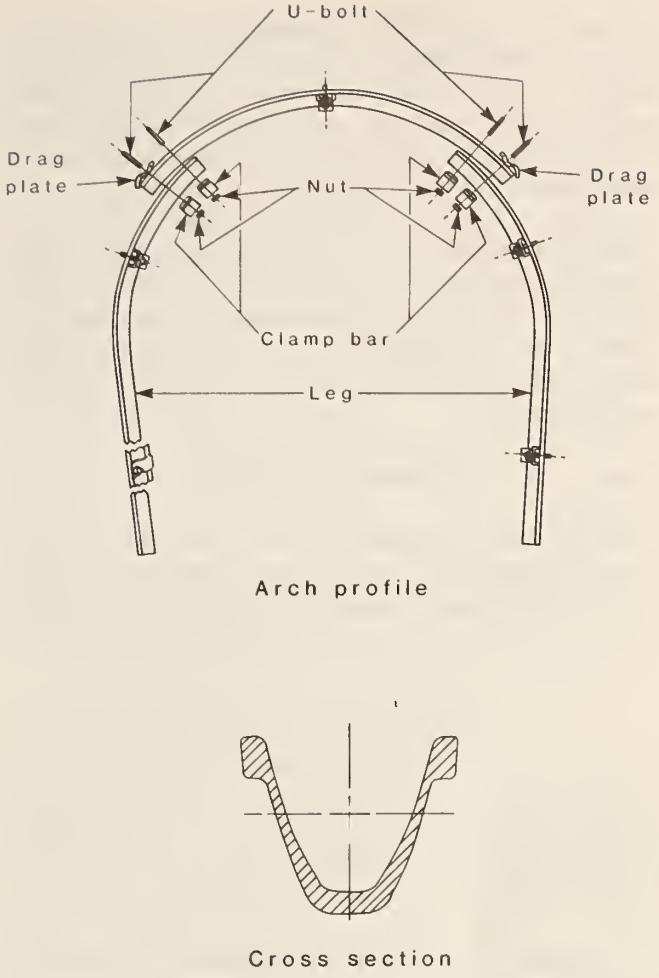

FIGURE 7. - Typical arch with U-shaped cross section.

TYPES OF ROOF STRATA

The roof strata in underground coal mines are normally divided into three classes: immediate roof, main roof, and total remaining overburden. The immediate roof is that portion of the strata immediately above the mined opening that will fall if left unsupported for a relatively short period (usually a few days). The behavior of the immediate roof is highly dependent on opening width, in situ stresses, induced mining stresses, structure, and environmental factors such as temperature and moisture. The immediate roof is of the most direct concern for safety in the mined opening and, therefore, is the stratum toward which the most control efforts have been directed. The two basic methods of control that can be applied to the immediate roof are internal, such as rock bolts, and external, such as steel supports.

The second class of roof strata is the main roof. This is the stratum that lies above the immediate roof and spans the opening if the immediate roof falls. It is generally agreed in the mining industry that the main roof cannot be supported by artificial means. This means that roof bolts, cribs, steel supports, etc., will not be effective in supporting the main roof.

The third strata classification is the total remaining overburden. This overburden will settle, but normally this settlement can be postponed long enough to permit mining; its stability depends upon the action of the main roof.

In multiple-seam mining, pillar remnants in overlying seams may cause large stress concentrations. The entries should be aligned, as much as possible, to provide more uniform stress conditions.

OVERBURDEN PRESSURE

Overburden pressure does not have a direct effect on the selection of a steel support design. However, the overburden pressure does have an indirect effect in the following ways:

1. The overburden pressure is one of the factors that determine the amount of convergence that can be expected in an opening and, hence, the amount of deformation that the support can be expected to receive.

2. The overburden pressure also affects the stress in the immediate roof that will comprise the support load. The overburden pressure is one of the factors that determine the height of the expected support envelope.

SEAM THICKNESS

The seam thickness enters into support selection both directly and indirectly. Directly, the seam thickness determines the height of the openings and supports and, therefore, the resistance of the supports to column failure. Indirectly, the seam thickness is one of the factors in determining of convergence and, therefore, in determining the amount of expected deformation.

IMMEDIATE ROOF TYPE

The immediate roof type is the single most important factor in determining steel support design. The immediate roof's weight, thickness, stress, and competence all influence the design of the support. The immediate roof is the strata that are actually being supported by the steel supports and, therefore, its properties are vital.

FLOOR TYPE

The type of floor is one of the contributors of the convergence and, hence, the expected deformation. Since the support normally rests on the floor, the floor type also determines the need for footpads or other load-spreading devices.

ENTRY WIDTH

Support design is directly dependent on entry width in two ways. First, supported load is directly proportional to width. Second, support design and strength are directly proportional to span.

ENTRY SHAPE

Entry shape (rectangular, arched, full circle, etc.) has a significant effect on the stability of the opening. It also affects the amount of artificial suupport required.

ROCK PROPERTIES

Strength parameters for the strata around the opening should be determined. Although the strength of coal does not directly enter into any of the design information, it does affect convergence and expected deformation. Convergence is influenced by the mechanical strength of the materials in the main roof, immediate roof, coal seam, and floor.

ROCK MECHANICS DATA

The height and shape of the support envelope that the structure must be designed for are determined by the height and integrity of the pressure arch that will form (assuming laminated strata) when the entry material is removed.

STEEL TYPE

Mild steel (grade 40 to 60) with good ductility is desirable for underground use. The ductility of the steel determines its ability to accept localized yielding without catastrophic failure of the support. Surface hardness is important for yielding arches to ensure that sliding movement can still take place under load without gouging of the sliding surfaces. Detailed discussions of steel for use in underground supports can be found in chapter 5 of Fritz Spruth's book, "Steel Roadway Supports" (3), and in chapter 2 of Proctor and White's book, Rock Tunneling With Steel Supports" (4). Available standard U.S. steel sections are listed in the manual of steel construction (5) by the American Institute of Steel Construction (AISC). This manual also includes design and fabrication procedures for several grades of steel. The allowable stresses listed in the manual can be increased to the yield point of the steel for underground temporary support. Several good textbooks covering elastic and plastic steel design procedures are available (6-8). They cover the principles of good steel design which account for bending, axial, torsion, and shear stresses, safety factors, axial and lateral buckling, shear stiffness, end bearing, etc.

BACKPACKING

Most steel support failures occur from point loads that overstress the support locally. Failure in this context means failure of the steel support to maintain entry shape because of local deformation. To prevent this type of failure, attempts are made to provide a continuous structural interconnection between the support and the surrounding rock. In practice, this is accomplished in two steps.

First, considerable care is taken to cut the entry to the approximate shape of the support. This avoids the need to fill large openings, which is costly. Also, large openings are difficult to fill with a material that will evenly distribute the load from the surrounding strata. Figure 8 shows examples of poor and good practices.

Second, when the support is set, the space between the support and the surrounding rock is packed with a material that is deformable and yet has the structural integrity necessary to transfer the load from the surrounding strata. A common material used is waste rock. In British mines, the waste rock is placed in paper bags, and the bags are then packed into the space. The small size of the rock and the use of bags make the material handleable and yet give it the needed properties of deformation and integrity. The most common material used in U.S. mines is wood because of its availability.

EXPEDITIOUS SUPPORT INSTALLATION

Steel supports should be installed closely behind the face to minimize the span of unsupported roof and the time that a section of roof remains unsupported. European practice is to install steel arches within about 6 ft of the face and within 8 h after roof exposure.

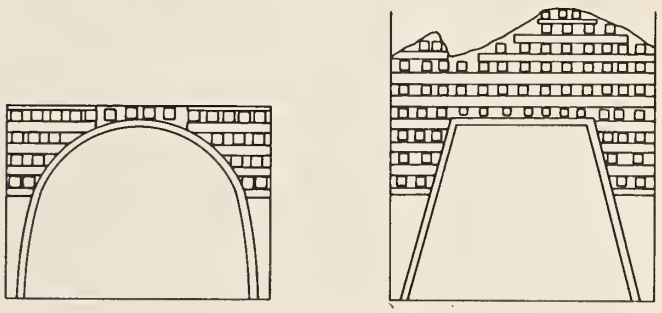

Poor practice. Overcutting requires excessive timbering.

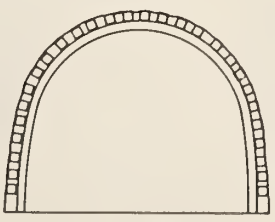

Good practice. Close cutting requires minimal amount of blocking.

FIGURE 8. - Examples of poor and good backpacking practices.

EXAMPLE OF STEEL SUPPORT SELECTION FOR U.S. MINES

The following example describes a two-step process for the design of steel supports using available U.S. steel sections. The two steps involved are load determination and support selection.

LOAD DETERMINATION

First, it is necessary to determine the expected loads and the support required for those loads. The analysis is based on the immediate roof envelope. Figure 9 shows three roof envelopes at heights of b/2, b, and 3b/2 above the roofline. It is assumed that the envelope acts as a free surface (that is, the rock above the envelope is self-supporting and no loads are transferred from the surrounding strata). The heights of the roof envelopes shown in figure 9 are idealizations that include conditions normally encountered in practice. The actual height of the envelope in a particular mine may be less or greater than those depicted.

The shape of the roof envelope is considered to be a parabola. Assuming a parabolic roof envelope at a height of h ft in the roof above an entry b ft wide, the area of the parabola between the roof line and the envelope is

$$A = 2/3\ bh. \qquad (1)$$

Multiplying by a distance of 1 ft along the entry gives the volume of rock between the roof line and the envelope.

$$V = 2/3\ bhl. \qquad (2)$$

Multiplying by γ (the density of the rock in pounds per cubic feet) gives the weight of rock per foot of entry length that must be held up by the supports:

$$P = 2/3\ bh\gamma. \qquad (3)$$

A nomographic solution of equation 3 is shown in figure 10. The nomogram is used as follows: (1) Select the entry width on the right side of the X axis; (2) move vertically upwards to the appropriate rock density curve; (3) move horizontally to the left to the appropriate support envelope height curve; and (4) move vertically downwards, and read the weight of rock to be supported per foot of entry length on the left side of the X axis. The correct routing is depicted by the three arrows in the figure. Support loads for special situations having parameters outside the range of the nomograph can be calculated with equation 3.

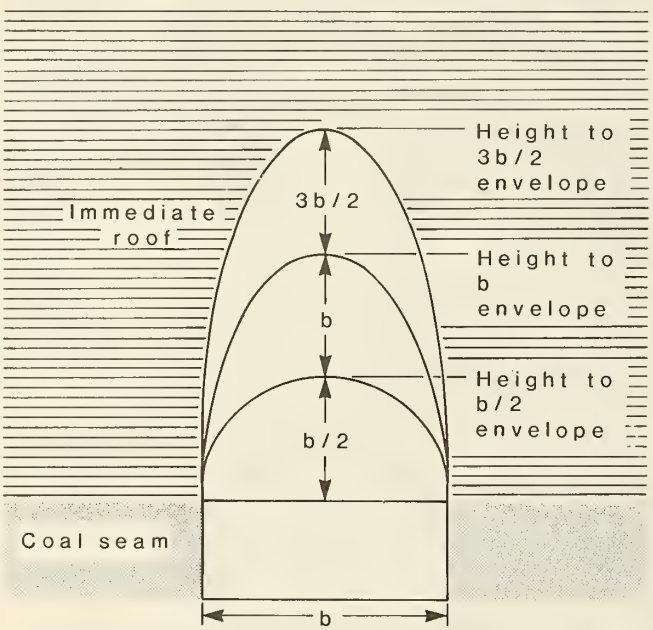

FIGURE 9. - Possible roof support envelopes for entry width.

Equation 3 or figure 10 permits the determination of support loads per foot of entry length for various entry widths, rock densities, and envelope heights. An estimate of envelope height can be obtained from prior roof falls. Multiplying this quantity by the spacing between supports along the entry gives the total weight to be supported by each support. Design of the support beam can then be determined by reference to the "Manual of Steel Construction" (5) or a similar steel design manual.

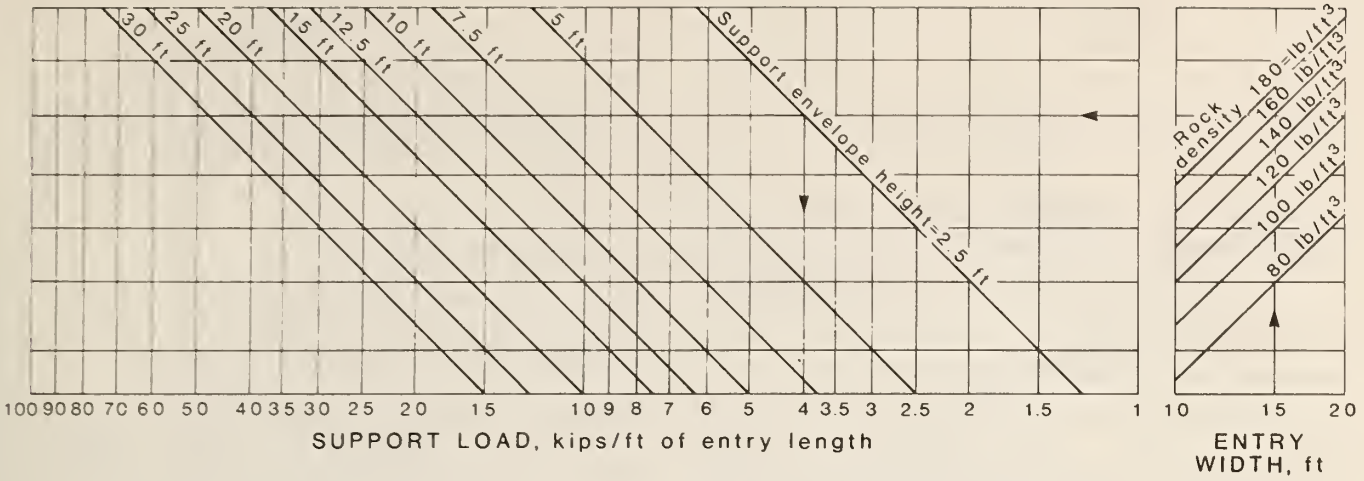

FIGURE 10. - Nomogram for determining support loads.

Four different types of beam loadings are shown in figure 11. They include concentrated loading, uniform loading, uniformly varying loading, and parabolic loading. Formulas for calculating end reaction, maximum shear, maximum moment, and maximum deflection are presented for each case.

SUPPORT SELECTION

The design example is based on the following assumptions. A 16-ft-wide entry is to be supported. The roof is composed of shale rock with a density of 160 lb/ft^3. Support envelope height is estimated as 24 ft (3b/2), indicating that heavy loading is expected. The supports will be spaced 4 ft apart along the entry. Parabolic loading of the supports by the roof rock (case 4) is assumed. A typical yield strength of structural steel is 36,000 psi. It is assumed that the critical load condition causes yielding of the section. In other words, the failure load is defined when one element of the supporting structure has reached yield strength of the steel.

The nomograph of figure 10 gives a support load of 41 kips per foot of entry length for a 16-ft-wide entry, 160-lb/ft^3 rock density, and 24-ft-high support envelope. Multiplying this number by the 4-ft support spacing gives 164 kips or 164,000 lb as the total weight of roof rock to be carried by each support. The maximum moment to be resisted in terms of the total load and beam length is

$$M_{max} = \frac{5\ WL}{32} = \frac{5\ (164{,}000)\ (16)}{32}$$

$$= 410{,}000\ \text{ft·lb}. \qquad (4)$$

The required section modulus is obtained by converting the maximum moment to inch pounds and dividing by the yield strength of 36,000 psi.

$$S = \frac{M_{max}}{F_y} = \frac{(410{,}000)\ (12)}{36{,}000} = 137\ \text{in}^3. \qquad (5)$$

Referring to the "W Shapes, Properties for Designing" section of a steel construction manual (5), and using the plastic modulus (Z_x) column, choose the following beams as having at least a 137-in^3 section modulus:

W 14 × 82, W 18 × 71,

W 16 × 77, W 21 × 62.

Without concern for headroom or clearance, select the lightest weight section, which is the W 21 × 62 beam. The second number in the W designation is the beam weight in pounds per foot. Pertinent properties of the selected beam are listed in figure 12.

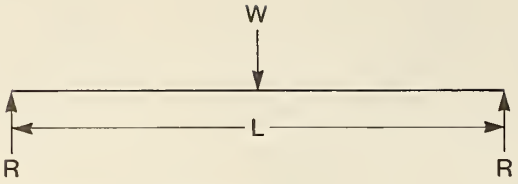

End reaction: $R = \frac{W}{2}$

Maximum shear: $V_{max} = \frac{W}{2}$

Maximum moment: $M_{max} = \frac{WL}{4}$

Maximum deflection: $\delta_{max} = \frac{WL^3}{48EI} = 0.0208\frac{WL^3}{EI}$

Case 1-concentrated load

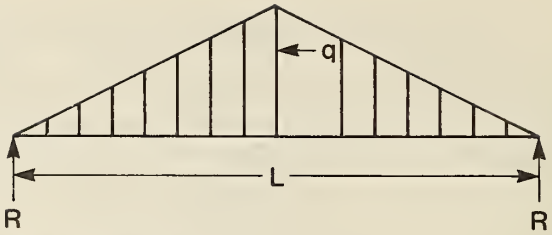

Total load: $W = \frac{qL}{2}$

End reaction: $R = \frac{qL}{4} = \frac{W}{2}$

Maximum shear: $V_{max} = \frac{W}{2}$

Maximum moment: $M_{max} = \frac{qL^2}{12} = \frac{WL}{6}$

Maximum deflection: $\delta_{max} = \frac{qL^4}{120EI} = \frac{WL^3}{60EI}$

Case 3-uniformly varying load

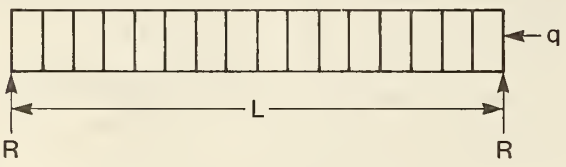

Total load: $W = qL$

End reaction: $R = \frac{qL}{2} = \frac{W}{2}$

Maximum shear: $V_{max} = \frac{W}{2}$

Maximum moment: $M_{max} = \frac{qL^2}{8} = \frac{WL}{8}$

Maximum deflection: $\delta_{max} = \frac{5\ qL^4}{384EI} = \frac{5\ WL^3}{384EI} = 0.013\frac{WL^3}{EI}$

Case 2-uniform load

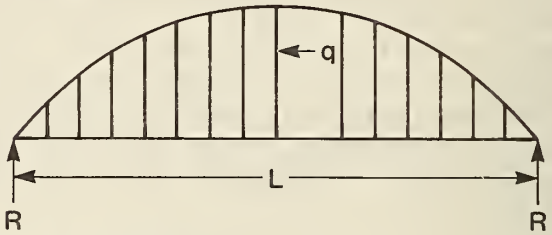

Total load: $W = \frac{2qL}{3}$

End reaction: $R = \frac{qL}{3} = \frac{W}{2}$

Maximum shear: $V_{max} = \frac{qL}{3} = \frac{W}{2}$

Maximum moment: $M_{max} = \frac{5qL^2}{48} = \frac{5WL}{32}$

Maximum deflection: $\delta_{max} = \frac{61qL^4}{5,760EI} = \frac{61WL^3}{3,840EI}$

Case 4-parabolic loading

FIGURE 11. - Types of beam loading conditions.

CHECKS FOR SUPPORT ADEQUACY

The selected beam will now be checked for the following conditions.

1. Shear capacity.
2. Lateral stability.
3. Deflection.
4. Localized buckling.
5. Support length (web crippling).

All steel design and review calculations are based on the specifications of the American Institute of Steel Construction. Plastic design methods have been used throughout this example.

Shear Capacity

The maximum shear on the beam is

$$V_{max} = \frac{W}{2} = \frac{164,000}{2} = 82,000 \text{ lb.} \quad (6)$$

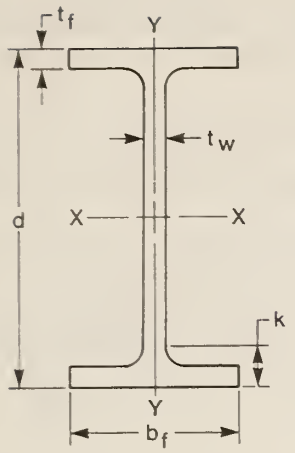

z_x plastic section modulus = 144 in^3
d: beam depth = 21 in
t_w: web thickness = 0.4 in
r: radius of gyration about Y axis = 1.77 in
I: moment of inertia about X axis = 1,330 in^4
b_f: flange width = 8.24 in
t_f: flange thickness = 0.615 in
k: distance from outer face of flange to web toe of fillet = 1.25 in
E: modulus of elasticity = 29,000,000 psi
F_y: yield strength of steel = 36,000 psi

FIGURE 12. - Pertinent properties for selected beam.

The allowable shear for the selected beam in terms of the yield strength (F_y), web thickness, and beam depth (see figure 12 for symbols and values) is

$$V_a = 0.55\ (F_y)\ (t_w)\ (d)$$

$$= 0.55\ (36{,}000)\ (0.4)\ (21.0)$$

$$= 166{,}300\ \text{lb}. \qquad (7)$$

Since the allowable shear is greater than the maximum shear, this size beam is acceptable for the shear loading.

Lateral Stability

The critical length for lateral stability is calculated by the formula

$$\frac{l_{cr}}{r} = \frac{1{,}375}{F_y} + 25, \qquad (8)$$

where the yield strength of the steel (F_y) is used in kips per square inch. Substituting in the formula gives

$$l_{cr} = (1.77) \times \left(\frac{1{,}375}{36} + 25\right)$$

$$= 111\ \text{in}. \qquad (9)$$

As the beam is 16 ft long, it should be braced (struts from beam to beam) on the compression flange at the midspan of the beam. This lateral bracing will prevent buckling of the compression flange.

Deflection

The deflection formula (figure 11, case d) is

$$\delta_{max} = \frac{61\ WL^3}{3{,}840\ EI}$$

$$= \frac{61\ (164{,}000)\ (16)^3\ (12)^3}{3{,}840\ (29{,}000{,}000)\ (1{,}330)}$$

$$= 0.478 \cong 0.5\ \text{in}. \qquad (10)$$

Measurement of beam deflection permits a quick check on the condition of the beam. The midspan deflection can be measured with a pocket tape by stretching a string from one support to the other. For example, if 0.25-in deflection is measured, the beam still retains approximately 50 pct of its load capacity.

Localized Flange or Web Buckling

Beams are made with different flange and web thicknesses and may be subject to localized buckling, even though their section modulus is adequate for the load.

Flange thickness is checked with the following formula:

$$\frac{b_f}{2t_f} \leq 8.5. \qquad (11)$$

Substituting the selected beam values in the formula,

$$\frac{8.24}{2\ (0.615)} = 6.70 < 8.5;$$

beam is acceptable. (12)

The equation for checking web thickness assuming no axial load is

$$\frac{d}{t_w} \leq \frac{412}{\sqrt{F_y}}.$$

Where the yield strength of the steel (F_y) is used in kips per square inch, substituting beam values in the equation

$$\frac{21}{0.4} = 52.5 < \frac{412}{\sqrt{36}} = 68.7;$$

beam is acceptable. (13)

Support Length (Web Crippling)

This test is to check for localized web buckling from the concentrated loading that occurs over the supporting posts. The appropriate equation is

$$N \geq \frac{R}{0.75\ F_y\ (t_w)} - k, \qquad (14)$$

where N = the required bearing length between the beam and its support, in,

R = the end reaction, lb,

and t_w and k are defined in figure 12.

Substituting beam values into the equation,

$$N = \frac{82{,}000}{0.75\ (36{,}000)\ (0.4)} - 1.25 = 6.34. \qquad (15)$$

If a bearing length between the bottom of the beam and the supporting post of less than 6.3 in is used, a stiffener should be used at the end of the beam. This reinforcement can be provided by welding plates to both sides of the web.

The selected beam has been checked, using plastic theory based upon the recommendations of the AISC specifications, and has been found to satisfy the assumed loading conditions.

SUMMARY

The major source of injuries appears to be handling the steel supports, primarily due to their weight and awkwardness. Acceptable mechanical methods for quicker and safer installation of the heavy steel supports in the confining mine environment are needed.

The arch is a more efficient configuration than the flat crossbar, as the load is transmitted as compression rather than bending forces. Yielding arches are more effective than rigid arches under severe conditions that produce large deformations. The void space between the arch and the strata must be backfilled or blocked to provide uniform loading. Steel supports should be installed close to the face and shortly after roof exposure.

The load to be carried by steel supports can be calculated by assuming a parabolic-shaped roof support envelope. The actual height of this support envelope in a particular mine can be estimated by observing roof falls. A nomogram is provided for determining support loads per foot of entry length for various entry widths, rock densities, and support envelope heights. The support beam can then be designed by referring to

any steel construction manual. A design example is provided with pertinent equations and calculations. Equations are provided for checking the selected beam for adequacy, with respect to shear capacity, lateral stability, deflection, localized buckling, and web crippling.

REFERENCES

1. Peng, S. S. Coal Mine Ground Control. Wiley, 1978, 405 pp.

2. Hawkins, S. A. Health and Safety Analysis on Support Walls. Volume 2: Steel Supports Design Criteria: A Summary of European Data (contract J0295036, Management Eng., Inc.). BuMines OFR 121(2)-82, 1980, 61 pp.; NTIS PB 82-251968.

3. Spruth, F. Steel Roadway Supports: A Practical Handbook. Collier Guardian Co., Ltd., London, v. 2, 1960, 750 pp.

4. Proctor, R. V., and T. L. White. Rock Tunneling With Steel Supports. Commercial Shearing, Inc., Youngstown, OH, 1946, 278 pp.

5. American Institute of Steel Construction, Inc. Manual of Steel Construction. 7th ed., 1973, 1200 pp.

6. Salmon, C. G., and J. F. Johnson. Steel Structures. Harper & Row, 2d ed., 1980, 945 pp.

7. McCormac, J. C. Structural Steel Design. Harper & Row, 3d ed., 1982, 662 pp.

8. Kuzmanovic, B. O., and N. Willems. Steel Design Structures. Prentice-Hall, 2d ed., 1978, 600 pp.

APPENDIX.--EXPLANATION OF SYMBOLS

A	Area
b	Entry width
b_f	Flange width
d	Beam depth
E	Modulus of elasticity
F_y	Yield strength of steel
γ	Density of rock
h	Height of roof envelope
I	Moment of inertia about Y axis
k	Distance from outer face of flange to web toe of fillet
L	Beam length
l_{cr}	Critical length for lateral stability
M_{max}	Maximum moment
N	Required length between beam and support
P	Weight of rock that must be supported
q	Magnitude of distributed load on beam
R	End reaction
r	Radius of gyration about Y axis
S	Section modulus
t_f	Flange thickness
t_w	Web thickness
V	Volume
V_a	Allowable shear
V_{max}	Maximum shear
W	Total load
Z_x	Plastic section modulus
δ_{max}	Maximum deflection

☆U.S. GPO: 1984-505-019/5068

INT.-BU.OF MINES,PGH.,PA. 27725

UNITED STATES
DEPARTMENT OF THE INTERIOR
BUREAU OF MINES
4800 FORBES AVENUE
PITTSBURGH, PENNSYLVANIA 15213

OFFICIAL BUSINESS
PENALTY FOR PRIVATE USE, $300

☐ Return to sender.
☐ Do not wish to receive this material, please remove from your mailing list.
☐ Address change. Please correct as indicated.

AN EQUAL OPPORTUNITY EMPLOYER

POSTAGE AND FEES PAID
U.S. DEPARTMENT OF THE INTERIOR
INT-416

H 209 85

HECKMAN
BINDERY INC.
MAY 85
N. MANCHESTER,
INDIANA 46962

LIBRARY OF CONGRESS
0 002 955 860 7